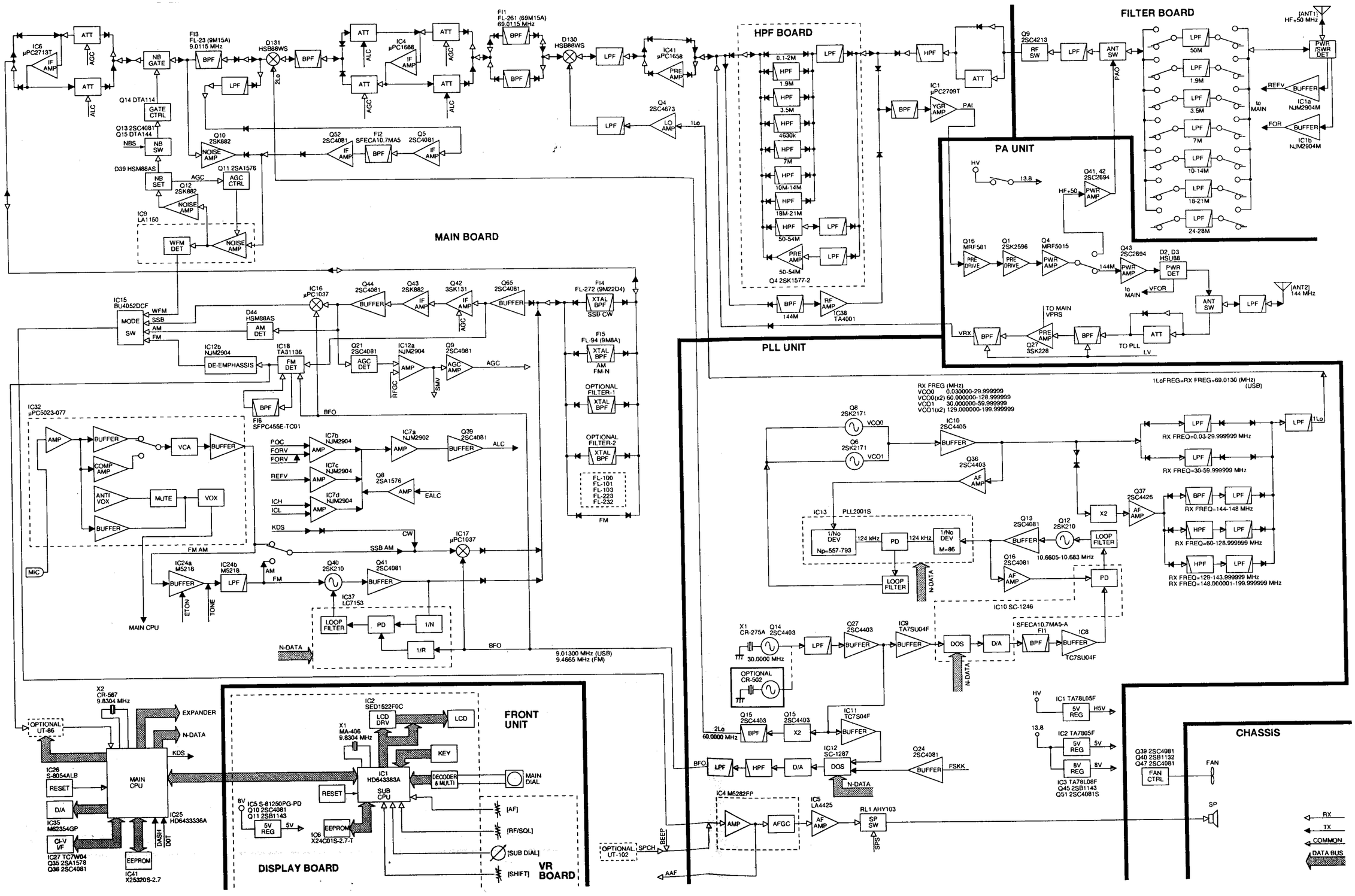
MAIN BOARD
HPF BOARD
FILTER BOARD
PA UNIT
PLL UNIT
FRONT UNIT
DISPLAY BOARD
VR BOARD
CHASSIS
IC6 μPC2713T
IF AMP
ATT
AGC
ALC
NB GATE
F13 FL-23 (9M15A) 9.0115 MHz
BPF
D131 HSB88WS
IC4 μPC1688
F11 FL-261 (69M15A) 69.0115 MHz
D130 HSB88WS
IC41 μPC1658
PRE AMP
Q4 2SC4673
LO AMP
1Lo
2Lo
Q14 DTA114
GATE CTRL
Q13 2SC4081
Q15 DTA144
NBS
NB SW
D39 HSM88AS
NB SET
Q12 2SK882
NOISE AMP
Q10 2SK882
Q11 2SA1576
AGC CTRL
IC9 LA1150
WFM DET
Q52 2SC4081
F12 SFECA10.7MA5
Q5 2SC4081
IC16 μPC1037
Q44 2SC4081
Q43 2SK882
Q42 3SK131
Q65 2SC4081
BUFFER
F14 FL-272 (9M22D4)
XTAL BPF
SSB CW
IC15 BU4052DCF
MODE SW
WFM
SSB
AM
FM
D44 HSM88AS
AM DET
IC12b NJM2904
DE-EMPHASIS
IC18 TA31136
FM DET
Q21 2SC4081
AGC DET
IC12a NJM2904
Q9 2SC4081
AGC AMP
F15 FL-94 (9M8A)
AM FM-N
OPTIONAL FILTER-1
OPTIONAL FILTER-2
FL-100
FL-101
FL-103
FL-223
FL-232
F16 SFPC455E-TC01
BFO
IC32 μPC5023-077
VCA
COMP AMP
ANTI VOX
MUTE
VOX
MIC
IC7b NJM2904
IC7a NJM2902
Q39 2SC4081
ALC
POC
FORV
REFV
ICH
ICL
IC7c NJM2904
IC7d NJM2904
Q8 2SA1576
EALC
KDS
CW
IC17 μPC1037
SSB AM
FM AM
IC24a M5218
IC24b M5218
ETON
TONE
MAIN CPU
Q40 2SK210
Q41 2SC4081
IC37 LC7153
LOOP FILTER
PD
1/N
1/R
N-DATA
9.01300 MHz (USB)
9.4665 MHz (FM)
0.1-2M
1.9M
3.5M
4630k
7M
10M-14M
18M-21M
50-54M
Q4 2SK1577-2
IC38 TA4001
144M
IC1 μPC2709T
YGR AMP
PAI
Q9 2SC4213
RF SW
ANT SW
PAO
50M
10-14M
18-21M
24-28M
PWR /SWR DET
REFV
BUFFER
IC1a NJM2904
FOR
IC1b NJM2904
to MAIN
[ANT1] HF+50 MHz
HV
13.8
HF+50
Q41, 42 2SC2694
PWR AMP
Q16 MRF581
Q1 2SK2596
Q4 MRF5015
Q43 2SC2694
D2, D3 HSU88
PWR DET
VFOR
[ANT2] 144 MHz
TO MAIN VPRS
VRX
Q27 3SK228
TO PLL
LV
RX FREG (MHz)
VCO0 0.030000-29.999999
VCO0(x2) 60.000000-128.999999
VCO1 30.000000-59.999999
VCO1(x2) 129.000000-199.999999
1LoFREG=RX FREG+69.0130 (MHz) (USB)
Q8 2SK2171
VCO0
Q6 2SK2171
VCO1
IC10 2SC4405
Q36 2SC4403
AF AMP
RX FREQ=0.03-29.999999 MHz
RX FREQ=30-59.999999 MHz
RX FREQ=144-148 MHz
RX FREQ=60-128.999999 MHz
RX FREQ=129-143.999999 MHz
RX FREQ=148.000001-199.999999 MHz
IC13 PLL2001S
1/No DEV
Np=557-793
124 kHz
M=86
Q13 2SC4081
Q12 2SK210
X2
Q37 2SC4426
LOOP FILTER
10.6605-10.683 MHz
Q16 2SC4081
IC10 SC-1246
X1 CR-275A
30.0000 MHz
OPTIONAL CR-502
Q14 2SC4403
Q27 2SC4403
IC9 TA7SU04F
DOS
D/A
SFECA10.7MA5-A
F11
IC8 TC7SU04F
Q15 2SC4403
IC11 TC7S04F
2Lo 60.0000 MHz
IC12 SC-1287
Q24 2SC4081
FSKK
IC1 TA78L05F
5V REG
H5V
IC2 TA7805F
8V REG
IC3 TA78L08F
Q45 2SB1143
Q51 2SC4081S
Q39 2SC4981
Q40 2SB1132
Q47 2SC4081
FAN CTRL
FAN
SP
IC4 M5282FP
AFGC
IC5 LA4425
RL1 AHY103
SP SW
SPS
OPTIONAL UT-102
SPCH
BEEP
AAF
X2 CR-567 9.8304 MHz
OPTIONAL UT-86
EXPANDER
N-DATA
KDS
IC26 S-8054ALB
RESET
MAIN CPU
IC35 M62354GP
CI-V I/F
IC27 TC7W04
Q35 2SA1578
Q36 2SC4081
IC25 HD6433336A
DASH
DOT
EEPROM
IC41 X25320S-2.7
IC2 SED1522F0C
LCD DRV
LCD
X1 MA-406 9.8304 MHz
KEY
IC1 HD643383A
SUB CPU
DECODER & MULTI
MAIN DIAL
IC5 S-81250PG-PD
Q10 2SC4081
Q11 2SB1143
5V REG
IC6 X24C01S-2.7-T
[AF]
[RF/SQL]
[SUB DIAL]
[SHIFT]
RX
TX
COMMON
DATA BUS